GRUNDFOS **DATA BOOKLET**

RMQ

Unit for rainwater collection
50 Hz

BE > THINK > INNOVATE >

GRUNDFOS

Contents

General data

Applications 3
Type key 3
Pumped liquids 3
Typical installation 4

Control panel

RMQ -A 5
RMQ -B 5
Performance curves 5

Technical data

Technical data 6
Features and benefits 6
Product range 6
Dimensions 7

General data

Applications

Water supply from water collection/recuperation systems or of potable water from mains, for toilets, washing machines, irrigation, car wash etc. in:

- private, single or two family households
- weekend cottages
- farms
- garden and green houses.

Pumped liquids

Potable water, rainwater not containg solid particles or fibres.

Type key

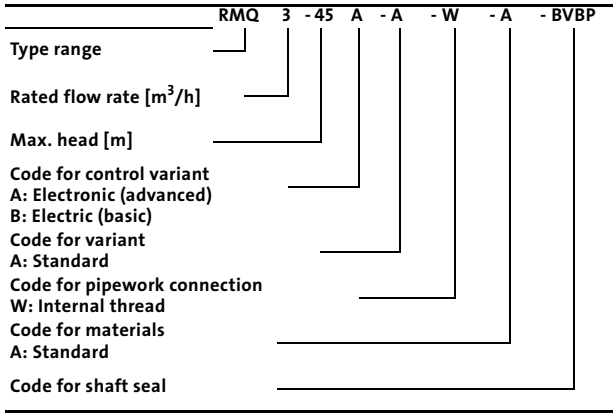

Pos.	Description
1	3-way valve complet
2	Motor for 3-way valve
3	GRUNDFOS pump for RMQ
4	Terminal connection 2-pol.
5	Control cover (RMQ - A & B)
6	Advanced control unit (A)
7	Basic control unit (B)
8	Back plate
9	Hose 1" (discharge)
10	Mains water tank
11	Inlet valve 3/4"
12	Hose 3/4" (mains water supply)
13	Housing
14	Velcro Fb0002
15	Wall mounting

Exploded view

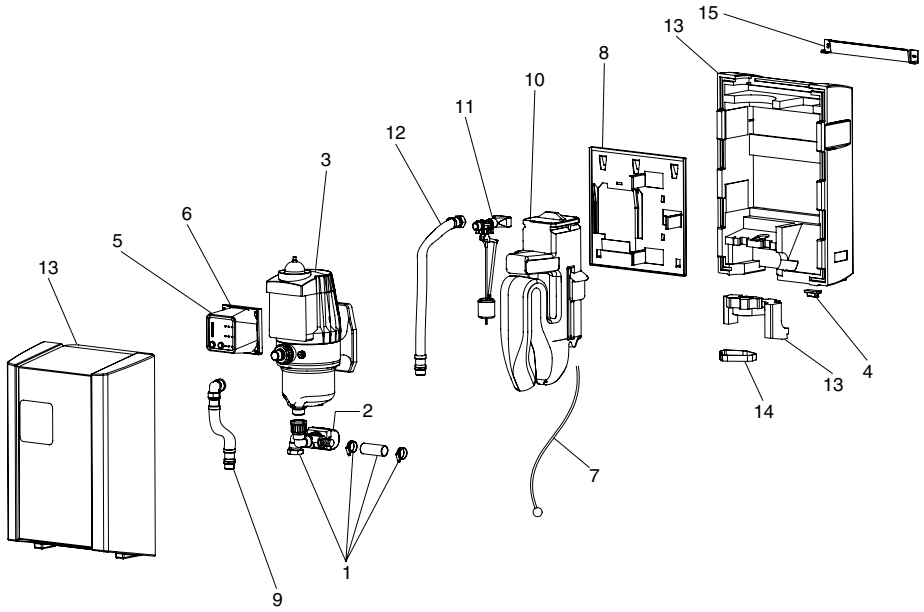

TM02 6578 1003

Typical installation

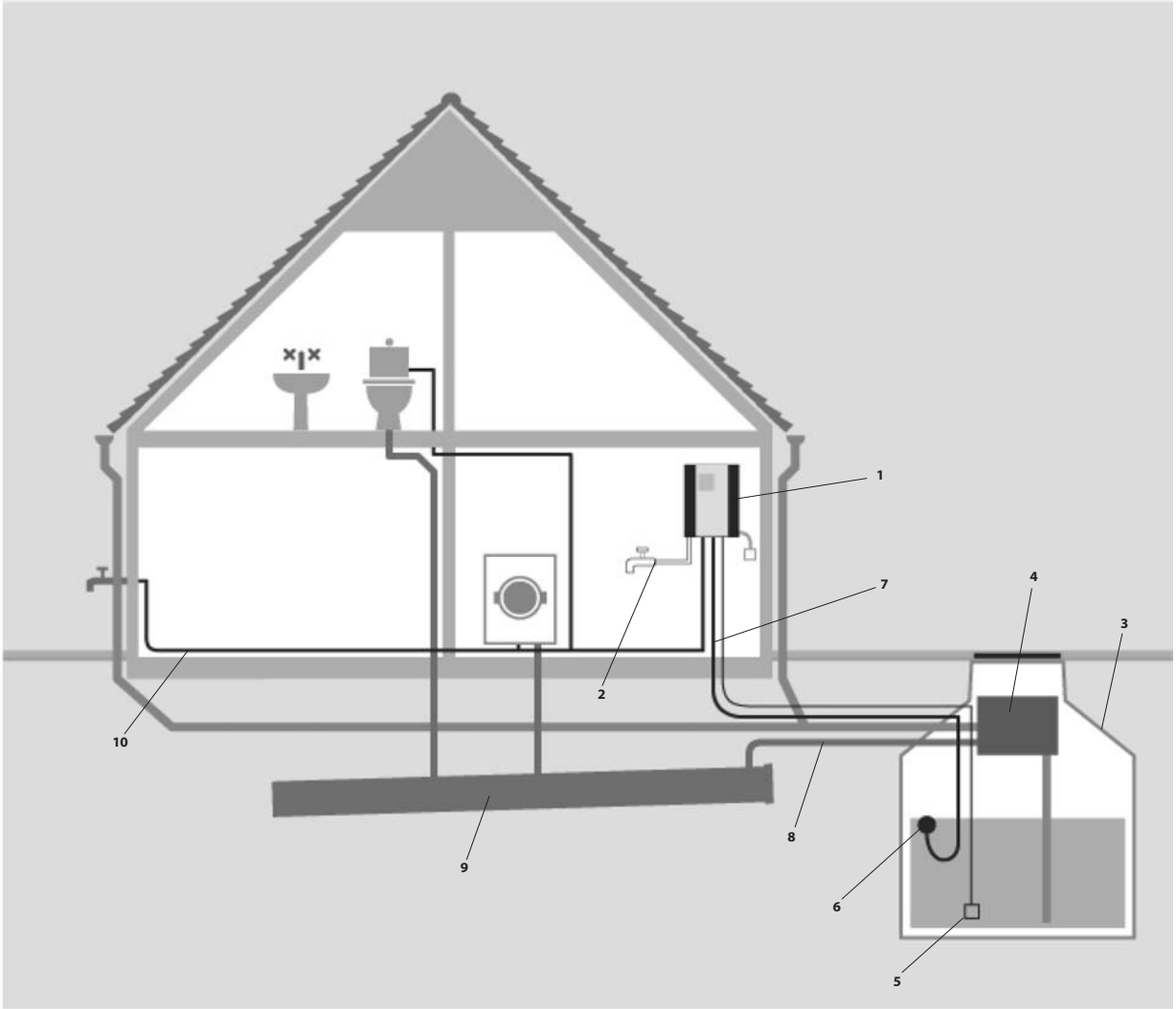

Pos.	Description
1	RMQ
2	Mains water supply
3	Rainwater tank
4	Filter
5	Level sensor/switch
6	Suction filter
7	Clean rainwater
8	Dirty rainwater/overflow
9	Sewer
10	Rainwater

Control panel

RMQ -A

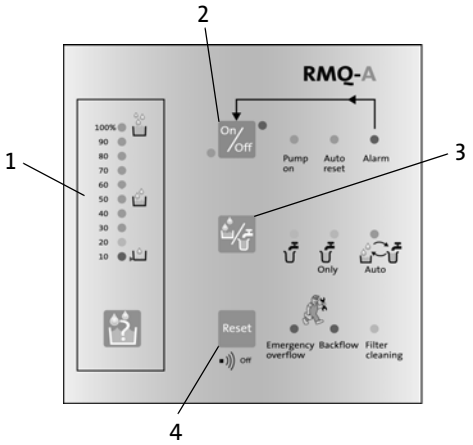

TM02 5978 5002

Pos.	Description
1	• Rainwater level indication (by pressing the button). The LED's can be switched on and off to save energy.
2	• The pump is started and stopped by means of the On/Off button. The On/Off button can be used as manual reset of a pump alarm. • The green LED next to the button shows that the pump is ready to operate. The red LED next to the button shows that the pump is on stand-by. • The green LED "Pump on" indicates that the pump is running. • The green LED "Auto reset" indicates that the auto reset function is active. After an alarm restarting will be attempted every 30 minutes for a period of 24 hours. • The red LED "Alarm" indicates that the pump is in alarm state. Manual resetting is possible by pressing the On/Off button.
3	• Button for automatic/manual changeover from rainwater to mains water. • The yellow LED next to the button indicates that mains water is used. • The yellow LED "Only" indicates that manual changeover to mains water is chosen. • The green LED "Auto" indicates that automatic changeover between rainwater and mains water is chosen.
4	• Button for reset of alarm. • The red LED "Emergency overflow" indicates high level in the integrated mains water tank. • The red LED "Backflow" indicates that water from the sewers is entering the rainwater tank (backflow sensor is accessory). • The yellow LED "Filter cleaning" indicates that it is time to clean the filter of the rainwater tank.

RMQ -B

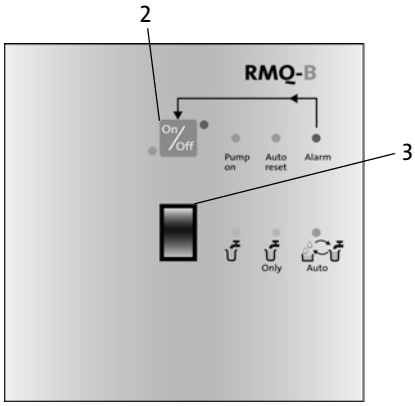

TM02 5977 5002

Performance curves

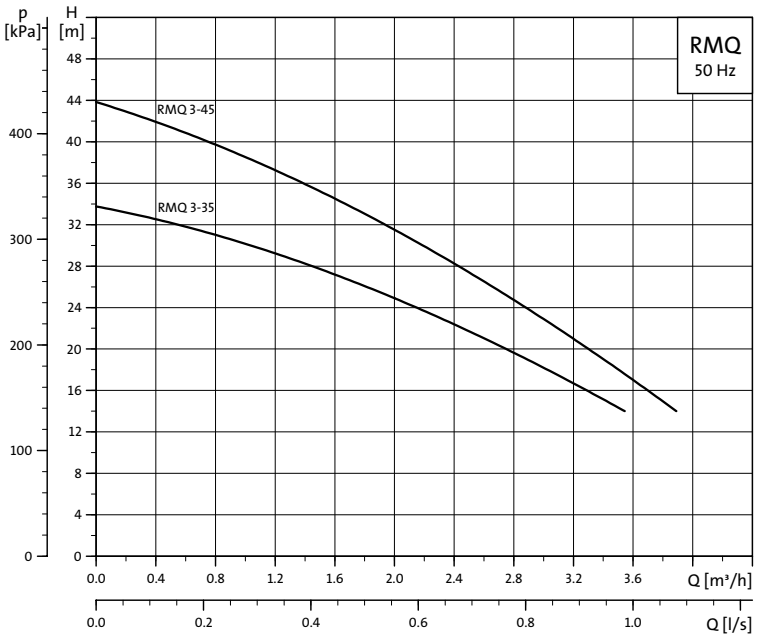

TM02 5764 3902

Technical data

Description	Value
Enclosure class	IP 42
Ambient temperature	+5°C to +45°C
Liquid temperature	0°C to +35°C
Material	EPP (foam)
Relative air humidity	Maximum 95%
Weight	Net weight 24 kg Gross weight 28 kg
Voltage	1 x 220-240 V +6% /–10%, PE
Insulation class	B
Power connection	Schuko plug with 1.5 metres cable
Installation	The unit must be wall mounted

Features and benefits

	RMQ-A	RMQ-B
Automatic changeover between rainwater tank and integrated mains water tank	●	●
Manual changeover between rainwater tank and integrated mains water tank	●	●
Acoustic alarm in case of overflow in integrated mains water tank	●	●
Level switch for rainwater tank		●
Level sensor for rainwater tank	●	
LED indication of rainwater level	●	
Acoustic and visible alarm in case of: - defects in level sensor - overflow in integrated holding tank - backflow (backflow sensor is optional)	●	
Control of additional booster pump. Must be used when the level difference between the RMQ and the rainwater tank is more than 8 metres.	●	
The integrated tank for the mains water is automatically emptied and refilled every 30 days to ensure freshness.	●	

Product range

Type	Control version		Part. no.
	Electric (basic)	Electronic (advanced)	
RMQ 3-35 B-A-W-A BVBP	●		96 49 47 77
RMQ 3-45 B-A-W-A BVBP	●		96 49 49 21
RMQ 3-35 A-A-W-A BVBP		●	96 49 47 76
RMQ 3-45 A-A-W-A BVBP		●	96 49 47 78

Dimensions

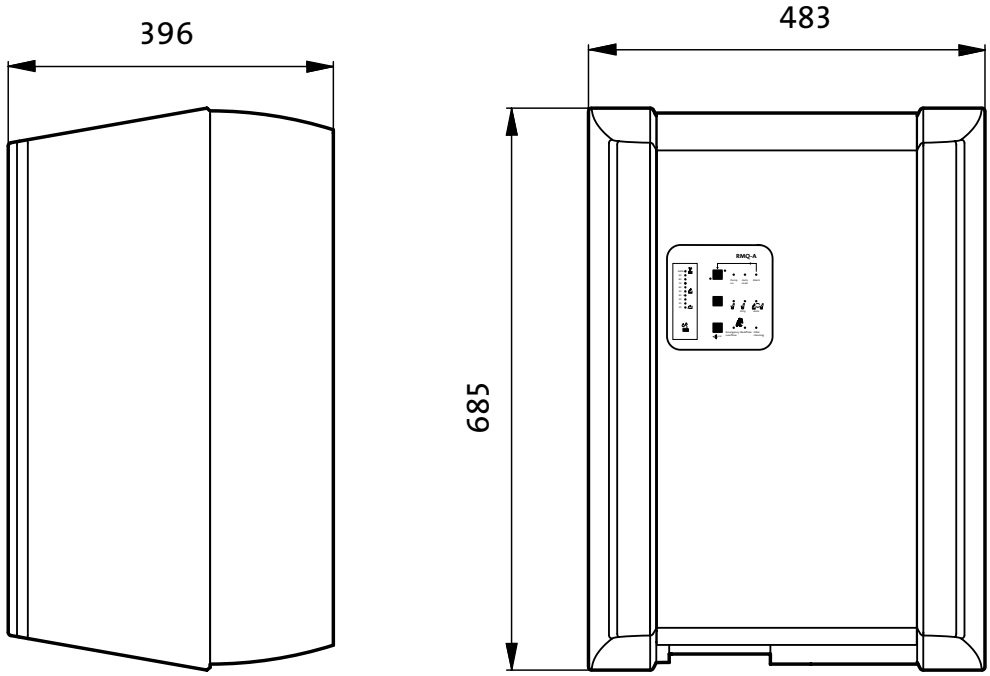

TM02 5768 5002

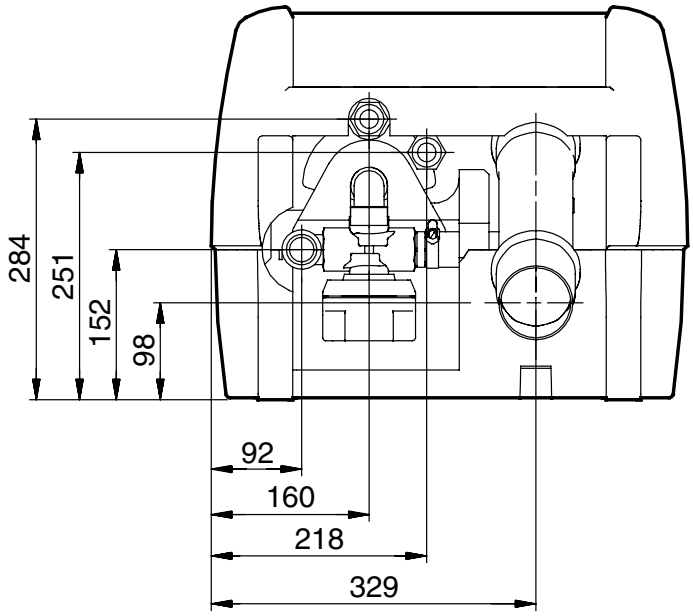

TM02 6026 5002

Dimensions are in mm.

BE > THINK > INNOVATE >

Being responsible is our foundation
Thinking ahead makes it possible
Innovation is the essence

96496479 1104	**GB**
Repl. 96 49 64 79 02 03	

Subject to alterations.

GRUNDFOS A/S . DK-8850 Bjerringbro . Denmark
Telephone: +45 87 50 14 00.

www.grundfos.com

GRUNDFOS®