New ALPHA SOLAR

TM06 5816 0216

EEI ≤ 0.2

4 Fixed Speeds + PWM Control

Unblocking Screw

70°C Ambient Temperature

Product description

The new ALPHA SOLAR is designed to be integrated in all kinds of thermal solar systems with either variable (matched-flow) or constant flow rate. High-efficiency ECM (Electronically Commutated Motor) pumps, such as ALPHA SOLAR, must not be speed-controlled by an external speed controller varying or pulsing the supply voltage.

The speed can be controlled by a low-voltage PWM (Pulse Width Modulation) signal from a solar controller to optimise the solar harvesting and temperature of the system. As a result, the power consumption of the pump will be reduced considerably.

If no PWM signal is available, ALPHA SOLAR can be set to constant speed, only switched on and off by the controller.

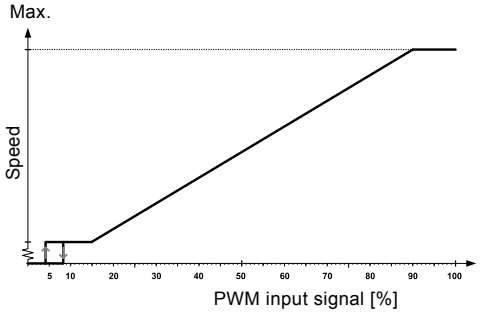

TM05 1575 3211

PWM input profile C (solar)

Features

- Constant speed.
- PWM C profile. The PWM signal is a method for generating an analog signal using a digital source.
- Low EEI (Energy Efficiency Index).
- Maintenance-free.
- Low noise level.
- Very simple installation.

Technical data

System pressure	Maximum 1.0 MPa (10 bar)
Minimum inlet pressure	0.05 MPa (0.50 bar) at 95 °C liquid temperature
Maximum liquid temperature	2-110 °C at 70 °C ambient temperature
	2-130 °C at 60 °C ambient temperature
Enclosure class	IPX4D
Motor protection	No external protection needed
Approval and marking	VDE, CE
Water/propylene glycol mixture	Maximum water/propylene glycol mixture is 50 %. Note: The water/propylene glycol mixture reduces the performance due to higher viscosity.

Replacement table

Old existing products		Replaced by	
52588352	SOLAR 25-120	98989297	ALPHA SOLAR 25-145 180
59508500	SOLAR 15-80	98989298	ALPHA SOLAR 15-75 130
59544183	SOLAR 25-40	98989300	ALPHA SOLAR 25-75 180
59546639	SOLAR 25-60	98989300	ALPHA SOLAR 25-75 180
96705819	SOLAR 15-60	98989298	ALPHA SOLAR 15-75 130
96817649	SOLAR 15-65	98989298	ALPHA SOLAR 15-75 130
96817652	SOLAR 25-65	98989299	ALPHA SOLAR 25-75 130
96817707	SOLAR 25-65	98989300	ALPHA SOLAR 25-75 180
96817710	SOLAR 15-45	98989298	ALPHA SOLAR 15-75 130
96817722	SOLAR 25-45	98989299	ALPHA SOLAR 25-75 130
96817725	SOLAR 25-45	98989300	ALPHA SOLAR 25-75 180

ALPHA SOLAR XX-75 130/180

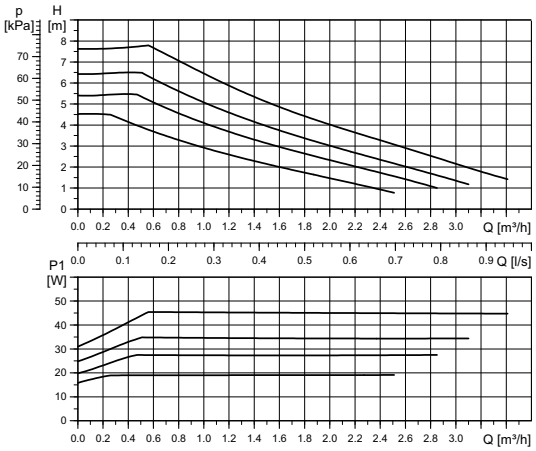

TM06 3658 1115

Note: PWM speed curves are available on request.

XX-75 Electrical data, 1 x 230 V, 50 Hz		
Speed	**P_1 [W]**	**$I_{1/1}$ [A]**
Minimum	2★	0.04
Maximum	45	0.48

★Only in PWM min speed operation

ALPHA SOLAR XX-145 130/180

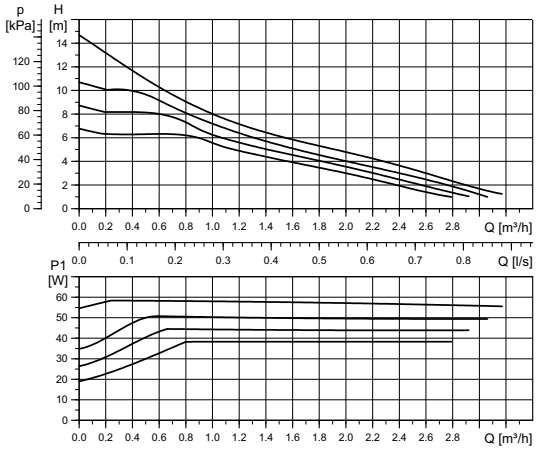

TM06 3652 1115

Note: PWM speed curves are available on request.

XX-145 Electrical data, 1 x 230 V, 50 Hz		
Speed	**P_1 [W]**	**$I_{1/1}$ [A]**
Minimum	2★	0.04
Maximum	60	0.58

★Only in PWM min speed operation

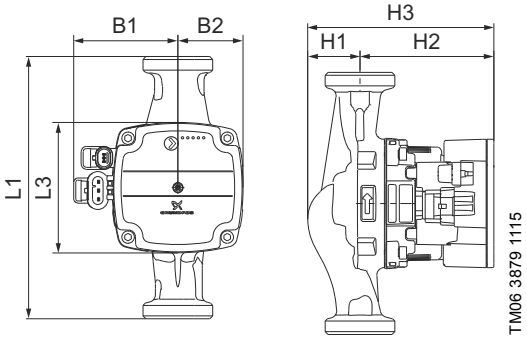

TM06 3879 1115

Dimensions

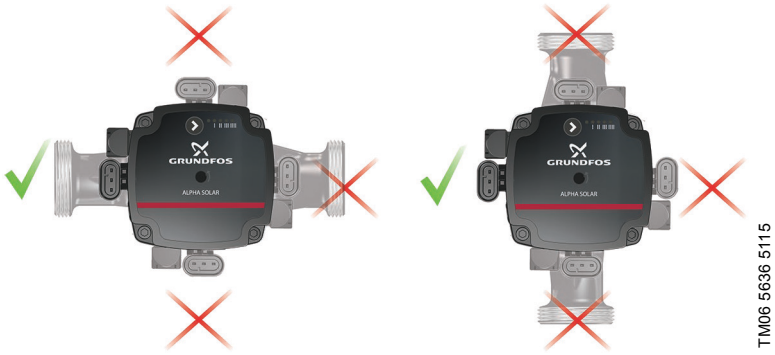

TM06 5636 5115

Correct control box position

Pump type	Dimensions [mm]							Connections [G]	Weight [kg]
	L1	L3	B1	B2	H1	H2	H3		
ALPHA SOLAR 15-75 130	130	90	72	45	36	92	128	1	1.8
ALPHA SOLAR 25-75 130	130	90	72	45	36	92	128	1 1/2	1.9
ALPHA SOLAR 25-75 180	180	90	72	45	36	92	128	1 1/2	2.0
ALPHA SOLAR 25-145 180	180	90	72	45	25	103	128	1 1/2	2.0

For further product documentation and product numbers, see below.

http://net.grundfos.com/qr/i/98144996

99037005 0216
ECM: 1178520

Subject to alterations.

GRUNDFOS A/S . DK-8850 Bjerringbro . Denmark
Telephone: +45 87 50 14 00
www.grundfos.com

© Copyright Grundfos Holding A/S

The name Grundfos, the Grundfos logo, and **be think innovate** are registered trademarks owned by Grundfos Holding A/S or Grundfos A/S, Denmark. All rights reserved worldwide.